PRINCIPAL PARTICULARS

LENGTH O.A.	179.90 m
LENGTH B.P.	171.50 m
BREADTH MLD.	28.40 m
DEPTH MLD.	15.00 m
DESIGNED DRAFT	10.00 m
SCANTLING DRAFT	10.80 m

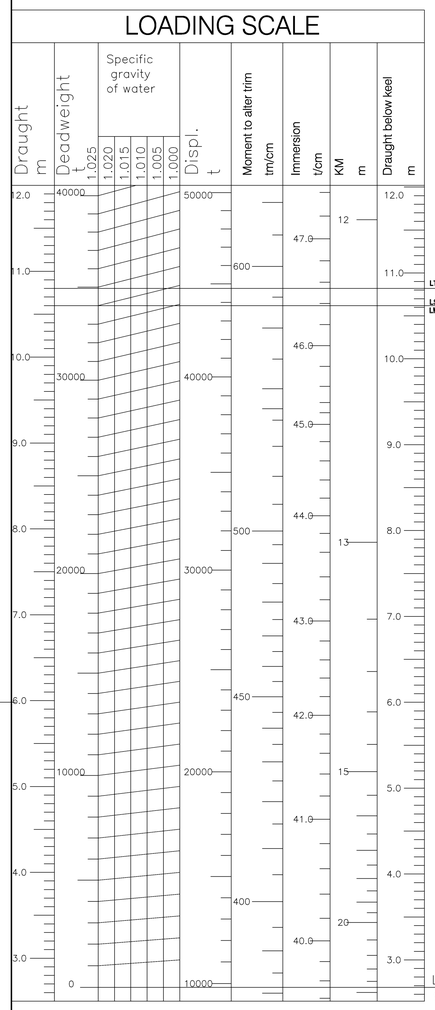

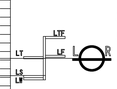

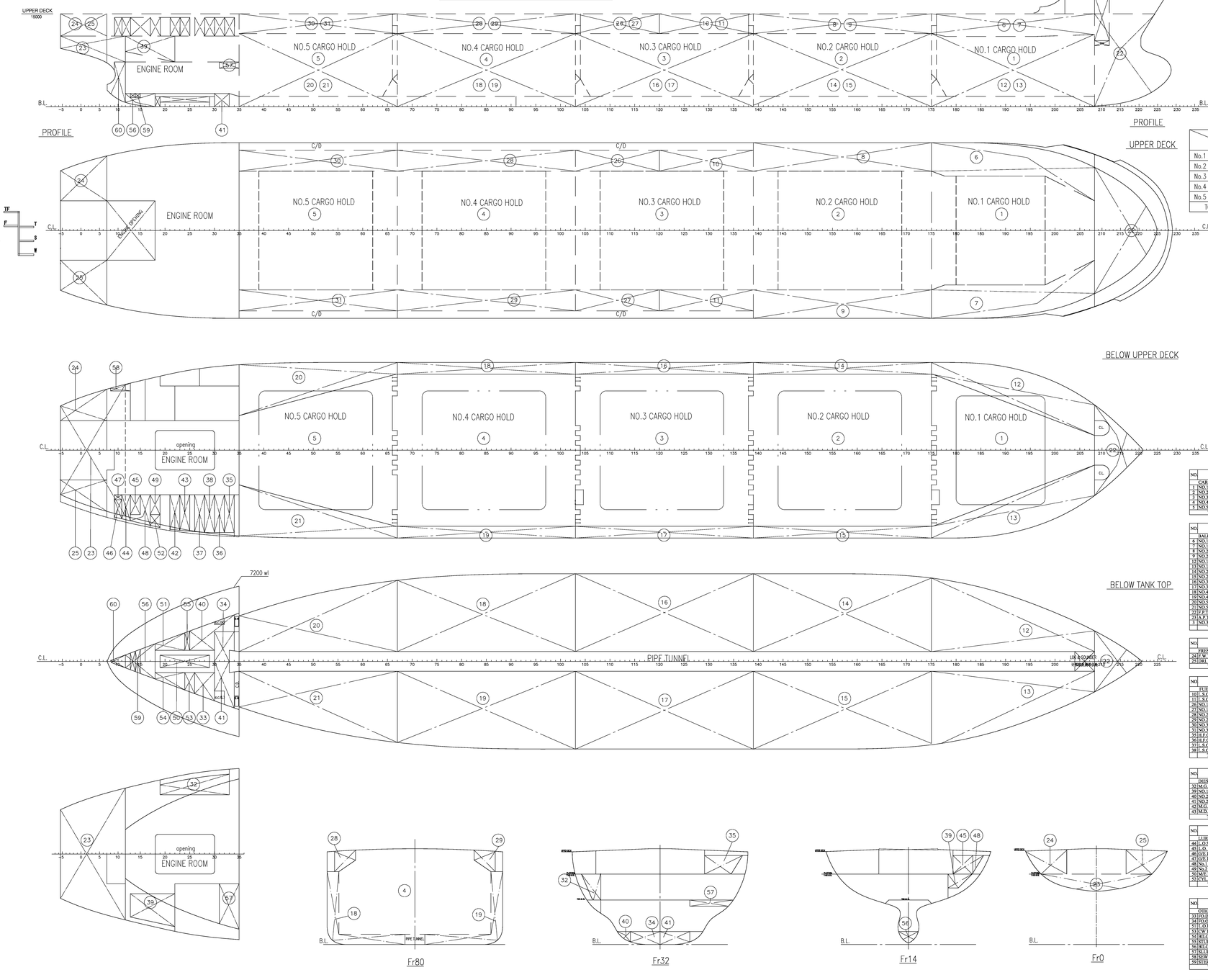

ON DECK CARGO WEIGHT TABLE

	DECK PART		HATCH COVER		TOTAL
	AREA(m^2)	WEIGHT(t)	AREA(m^2)	WEIGHT(t)	WEIGHT(t)
No.1 ON DECK	210	840	253	835	1675
No.2 ON DECK	260	1040	384	1267.2	2307
No.3 ON DECK	260	1040	384	1267.2	2307
No.4 ON DECK	260	1040	384	1267.2	2307
No.5 ON DECK	245	980	353	1166	2146
TOTAL	1235	4940	1758	5802.6	10742

Remarks:

1. Allowable designed cargo weight:
   upper deck : 4.0 t/m2
   hatch cover : 3.3 t/m2
2. Deck area including upper deck side and cross deck
   Hatch part area: hacth opening area only.
   on upper deck and hatch part at the condition of uniform load, total longitudinal strength and etc.
3. Each weight in the above table is shown allowable strength weight and actural loading work should be carried out considering stability.

EXPLANATION OF SYMBOLS

Vo (m^3): volume not deducted for the structure in the compartment
V (m^3): volume , V=Vo × structure factor
L.C.G. (m): center of volume from A.P.
(+) sign shows fore from A.P.
(-) sign shows aft from A.P.
V.C.G. (m): center of volume from baseline
Imax (m^4): max transverse moment of inertia of free surface

NO	NAME OF TANK	POSITION FR. NO.	V(Grain) (m3)	V(Bale) (m3)	L.C.G. (m)	T.C.G. (m)	V.C.G. (m)	Imax (m4)
	CARGO HOLDS							
1	NO.1 CARGO HOLD	175-208	6931.1	6515.0	-149.445	0.031	9.009	197190.8
2	NO.2 CARGO HOLD	139-175	10044.6	9642.8	-123.134	-0.007	8.763	565685.3
3	NO.3 CARGO HOLD	103-139	9420.8	9044.1	-94.355	0.005	8.867	548477.8
4	NO.4 CARGO HOLD	67-103	10032.7	9630.9	-65.568	0.006	8.763	565363.3
5	NO.5 CARGO HOLD	35-67	8010.9	7530.0	-38.499	-0.025	8.172	313333.3
	TOTAL		44439.6	42362.7	-92.884	0.001	8.897	

NO	NAME OF TANK	POSITION FR. NO.	V0 (m3)	V(NET) (m3)	L.C.G. (m)	T.C.G. (m)	V.C.G. (m)	Imax (m4)
	BALLAST WATER TANKS (S.G.=1.025t/m3)							
6	NO.1 T.S.T.(P)	175-208	375.4	367.9	-150.247	11.039	13.633	480.4
7	NO.1 T.S.T.(S)	175-208	375.4	367.9	-150.247	-11.039	13.633	480.4
8	NO.2 T.S.T.(P)	139-175	364.4	357.1	-123.200	12.150	13.649	233.6
9	NO.2 T.S.T.(S)	139-175	364.4	357.1	-123.200	-12.150	13.649	233.6
10	NO.1 W.B.T.(P)	175-208	871.6	854.2	-150.417	8.624	4.678	2012.2
11	NO.1 W.B.T.(S)	175-208	871.6	854.2	-150.417	-8.624	4.678	2012.2
12	NO.2 W.B.T.(P)	139-175	1125.1	1102.6	-123.110	10.391	3.742	4699.7
13	NO.2 W.B.T.(S)	139-175	1125.1	1102.6	-123.110	-10.391	3.742	4699.7
14	NO.3 W.B.T.(P)	103-139	1132.7	1110.0	-94.404	10.412	3.726	4792.0
15	NO.3 W.B.T.(S)	103-139	1132.7	1110.0	-94.404	-10.412	3.726	4792.0
16	NO.4 W.B.T.(P)	67-103	1107.9	1085.8	-65.805	10.349	3.787	4561.5
17	NO.4 W.B.T.(S)	67-103	1107.9	1085.8	-65.805	-10.349	3.787	4561.5
18	NO.5 W.B.T.(P)	35-67	875.5	858.0	-38.439	9.674	4.403	2022.1
19	NO.5 W.B.T.(S)	35-67	875.5	858.0	-38.439	-9.674	4.403	2022.1
20	F.P.T.	208-220	1079.4	1057.8	87.714	0.000	5.830	5215.5
21	A.P.T.	-5~20	426.1	417.6	2.61	0.325	10.017	4253.1
3	NO.1 CARGO HOLD	103-139	9468.1	9420.8	94.355	0.005	8.867	548477.8
	TOTAL		22678.8	22367.4				

NO	NAME OF TANK	POSITION FR. NO.	V0 (m3)	V(NET) (m3)	L.C.G. (m)	T.C.G. (m)	V.C.G. (m)	Imax (m4)
	FRESH WATER TANKS (S.G.=1.00t/m3)							
24	F.W.TK.(P)	-5~20 -2	165.0	161.7	0.692	7.700	13.459	200.2
25	DBL.W.TK.(S)	-5~20 -2	165.0	161.7	0.692	-7.700	13.459	200.2
	TOTAL		330.1	323.5	0.692	-0.000	13.459	

NO	NAME OF TANK	POSITION FR. NO.	V0 (m3)	V(NET) (m3)	L.C.G. (m)	T.C.G. (m)	V.C.G. (m)	Imax (m4)
	FUEL OIL TANKS (S.G.=0.96t/m3)							
10	L.S.O.TK.(P)	120-139	133.5	130.9	101.200	11.512	13.754	49.8
11	L.S.O.TK.(S)	120-139	133.5	130.9	101.200	-11.512	13.754	49.8
26	NO.1 F.O. T.(P)	103-120	119.5	117.1	86.800	11.512	13.754	44.5
27	NO.1 F.O. T.(S)	103-120	119.5	117.1	86.800	-11.512	13.754	44.5
28	NO.2 F.O. T.(P)	67-103	253.0	247.9	65.600	11.512	13.754	94.3
29	NO.2 F.O. T.(S)	67-103	253.0	247.9	65.600	-11.512	13.754	94.3
30	NO.3 F.O. T.(P)	35-67	224.9	220.4	38.600	11.512	13.754	83.8
31	NO.3 F.O. T.(S)	35-67	224.9	220.4	38.600	-11.512	13.754	83.8
35	H.F.O. SETT. TK.	32-34	25.2	24.7	24.001	-9.853	12.988	31.4
36	H.F.O. SERV. TK.	30-32	25.0	24.5	22.601	-9.830	12.989	30.7
37	L.S.O. SETT. TK.	26-28	24.5	24.0	19.201	-9.784	12.990	29.3
38	L.S.O. SERV. TK.	24-30	24.8	24.3	20.801	-9.807	12.990	30.0
	TOTAL		1561.2	1530.0	64.296	-0.626	13.705	

NO.	NAME OF TANK	POSITION FR. NO.	V0 (m3)	V(NET) (m3)	L.C.G. (m)	T.C.G. (m)	V.C.G. (m)	Imax (m4)
	DIESEL OIL TANKS (S.G.=0.86t/m3)							
32	M.G.O.STORAGE(L)TK.	19-33	64.1	62.9	19.711	10.569	9.890	15.9
39	NO.1 M.D.O. TK.	13-22	63.3	62.0	12.045	-7.977	10.100	52.3
40	NO.2 M.D.O. TK.(P)	25-34	29.7	29.1	20.625	3.880	1.298	41.6
41	NO.2 M.D.O. TK.(S)	30-34	29.9	29.3	21.239	-2.791	1.118	59.2
42	M.G.O. SERV.TK.	21-23	24.0	23.5	15.201	-9.726	12.993	27.6
43	M.D.O. SERV.TK.	23-25	24.2	23.7	16.801	-9.749	12.992	28.3
	TOTAL		235.2	230.5	17.456	-1.125	8.381	

NO.	NAME OF TANK	POSITION FR. NO.	V0 (m3)	V(NET) (m3)	L.C.G. (m)	T.C.G. (m)	V.C.G. (m)	Imax (m4)
	LUBRICATING OIL TANKS (S.G.=0.90t/m3)							
44	L.O.STOR.TK.	11-13	15.8	15.6	7.307	-9.134	13.022	12.2
45	L.O. SETT.TK.	13-15	15.3	15.0	8.801	-8.798	12.902	4.4
46	G.S.L.O.STOR.TK.	9-11	10.0	9.8	6.001	-8.439	13.067	5.1
47	GE.L.O.SETTL.TK.	6-11	2.9	2.8	6.000	-7.600	12.900	0.1
48	No.1 CYL.L.O.STOR.TK.	15-17	24.7	24.2	10.151	-9.650	13.076	24.4
49	No.2 CYL.L.O.STOR.TK.	17-19	15.4	15.1	12.000	-8.800	12.900	4.4
50	M.E.L.O.SUMP TK.	19-29	14.4	14.1	16.800	0.000	1.150	5.3
52	CYL OIL STOR.TK.FOR LSFO	17-19	8.6	8.3	12.026	-11.192	13.257	1.0
	TOTAL		105.2	103.1	10.314	-8.023	11.389	

NO	NAME OF TANK	POSITION FR. NO.	V0 (m3)	V(NET) (m3)	L.C.G. (m)	T.C.G. (m)	V.C.G. (m)	Imax (m4)
	OTHER TANKS (S.G.=1.00t/m3)							
33	FO.DRAIN TK.	26-30	19.0	18.6	20.101	-3.393	1.244	17.0
34	FO.O.FLOW TK.	30-34	28.0	27.4	23.077	2.442	1.083	25.6
51	L.O.DRAIN TK.	18-24	10.6	10.4	14.928	2.588	1.393	3.6
53	CW DRAIN TK.	24-26	6.8	6.7	17.634	-3.002	1.293	3.8
54	BILGE SLUDGE TK.	8-24	10.6	10.4	14.928	-2.588	1.393	3.6
55	STUFF BOX DRAIN TK.	24-25	3.3	3.1	17.209	2.935	1.303	1.6
56	BILGE TK.	12-18	21.2	20.7	10.292	0.000	1.252	21.0
57	SLUDGE TK.	31-35	22.0	21.3	24.003	-8.243	6.709	101.2
58	ESWAGE TK.	8-13	29.6	29.0	6.475	10.901	13.499	9.8
59	STERN TUBE LO TK.	14-15	1.7	1.7	9.211	0.000	1.783	2.8
	TOTAL		152.6	149.5	16.203	0.883	4.407	

NO.	NAME OF TANK	POSITION FR. NO.	V0 (m3)	V(NET) (m3)	L.C.G. (m)	T.C.G. (m)	V.C.G. (m)	Imax (m4)
	COOL WATER TANK (S.G.=1.00t/m3)							
60	C.W.T.	7-12	18.4	18.0	6.290	0.000	4.197	7.4

DEADWEIGHT AT DIFFERENT FREEBOARD MARK (Bulk)

Grid letter		Freeboard from deck line (mm)	Seasonal allowance (mm)	Corresponding Deadweight (t)
TF	Tropical Fresh	3754	466 (ab. summer)	35971
F	Fresh water	3979	241 (ab. summer)	34943
T	Tropical	3995	225 (ab. summer)	35988
S	Summer	4220	C O R	34938
W	Winter	4445	225 (bl. summer)	33893

DEADWEIGHT AT DIFFERENT FREEBOARD MARK (Log)

Grid letter		Freeboard from deck line (mm)	Seasonal allowance (mm)	Corresponding Deadweight (t)
LTF	Tropical Fresh	3963	457 (ab. summer)	35016
LF	Fresh water	4184	236 (ab. summer)	34010
LT	Tropical	4199	221 (ab. summer)	35036
LS	Summer	4420	200 (below C O R)	34009
LW	Winter	4445	25 (bl. summer)	33893

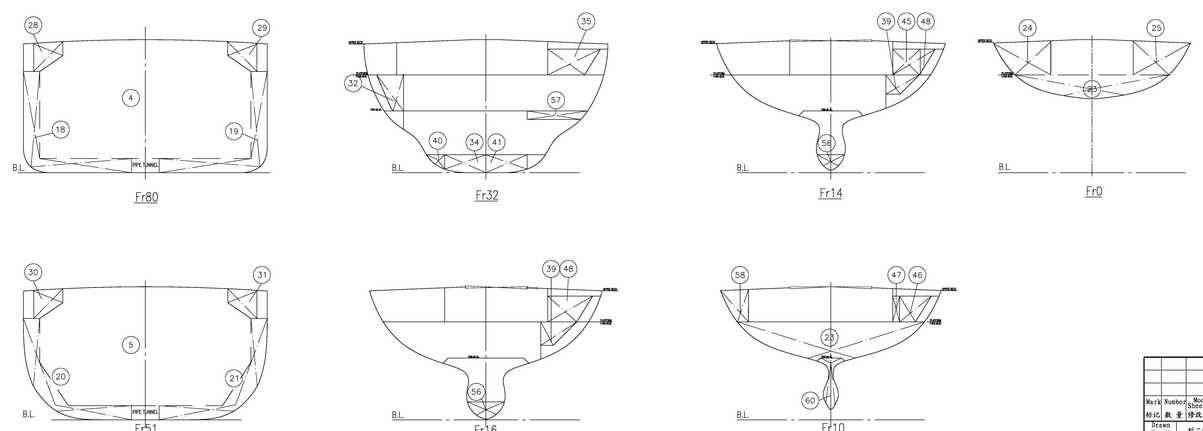

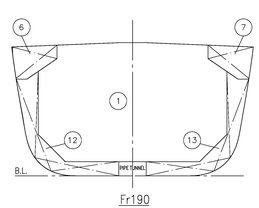

Mark Number 标记	Modify Sheet No. 修改单号	Sign. 签字	Date 日期	35000DWT BULK CARRIER 35000吨散货船
Drawn 设计	刘二斌		2013.1.8	CAPACITY PLAN 舱容图
Checked 校对	钱建华		2013.1.8	
Echecked 复核	刘海光		2013.1.8	M/V "CELIA" (S1187)
Approved 审定				

Initial design 初步设计 | Detail design 详细设计 | Production design 生产设计 | Finished plan 完工图 ✓

图号 Drawing No. S1187F100403D

Mark 标记 | Mass (kg) 重量(kg) | Scale 比例 1:200

Sheet 页 1 of 共 1 页

SHANGHAI SHIPYARD CO., LTD 上海船厂船舶有限公司